CAMRiSE Series Cam for Pierce/Trim/Flange - Long Stroke - CB-L140

Outline drawing/Product specifications

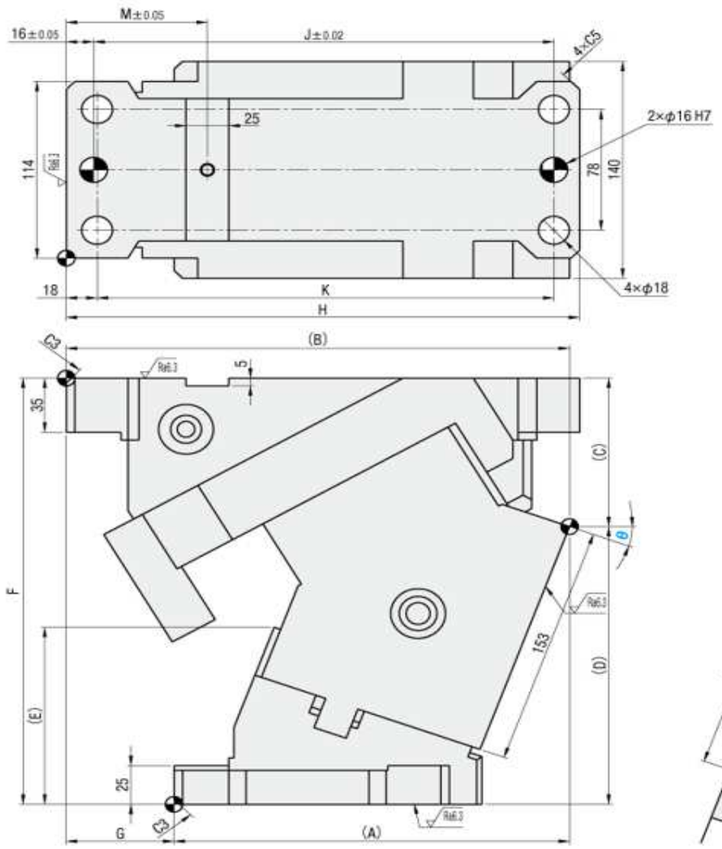

■Rear Extraction Space

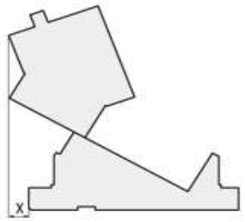

When installing in the mold, ensure sufficient rear extraction space.

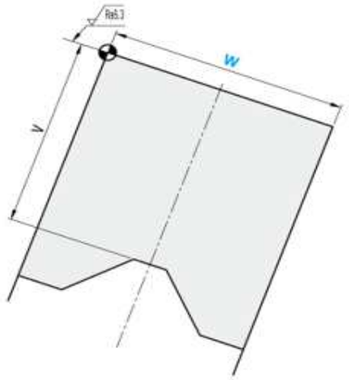

W	θ	(A)	(B)	(C)	(D)	(E)	F	G	H	J	K	V	P	M	X (ISO/GK)
140	00	175.00	280.00	73.00	202.00	81.7	275	105	280	249	247	113	180	122.5	0
	05	188.85	285.85	77.40	197.60	89.7		97	285	254	252				
	10	203.32	290.32	81.69	193.31	98.6		87	290	259	257				
	15	217.42	292.42	88.82	186.18	105.4		75	295	264	262			82.5	6.8
	20	231.16	294.16	95.78	179.22	113.0		63	300	269	267				14.1
	25	243.57	294.57	103.52	171.48	120.3		51	305	274	272				27.5
	30	255.67	292.67	113.03	161.97	126.3		37							40.7
	35	267.47	290.47	123.26	151.74	131.8		23	310	279	277				51.7
	40	277.00	286.00	139.21	140.79	136.7	280	9							62.3
	45	287.28	284.28	155.84	129.16	141.0	285	-3	315	284	282			122.5	67.5
	50	292.36	284.36	171.14	118.86	146.9	290	-8	325	294	292		175		68.3
	55	303.54	277.54	176.20	118.80	148.8	295	-26				115			77.2
	60	312.88	273.88	177.03	122.97	155.2	300	-39					170		85.8
	65	324.56	270.56	180.76	124.24	159.1	305	-54				120			92.7
	70	327.00	266.00	182.41	122.59	166.9		-61					161		98.8

Stroke S	Working Force kN (tonf)			Coil Spring				Gas Spring		Total weight Kg	Cam slider weight Kg	Tool mounting weight Kg	Model	W	θ
	Standard (1Million times)	Conditional (1Million times)	Max. (300,000 times)	Initial load N (kgf)	Final load N (kgf)	Model		Final load N (kgf)	Model						
35.4	127.4 (13.0)	159.3 (16.3)	191.1 (19.5)	429 (43.8)	8902 (908)	TF50X100	TH50X75	11162 (1139)	GSV750-63	47.3	17.2	12.8	CB-L	140	00
39.0										46.8					05
42.8										46.3					10
46.6										45.9					15
50.7										45.7					20
55.0										45.5					25
59.7										45.3					30
64.9										45.6					35
70.7										46.4					40
77.5										47.8					45
85.6										49.3					50
81.9				393 (40.1)	8683 (886)	TF50X90		11438 (1167)	GSV750-50	50.9	18.5	11.5			55
82.0				629 (64.2)				10911 (1113)		51.7	19.1	10.9			60
82.8				525 (53.6)	8412 (858)	TF50X80		11327 (1156)	GSV750-38	53.0	20.3	9.7			65
81.9				443 (45.2)	8061 (823)	TF50X70		11103 (1133)	GSV750-32	53.3	20.4	9.6			70

Alteration	Code	Spec.
	K	Addition of positioning key (1 Hexagon socket head bolt M8x15 included) 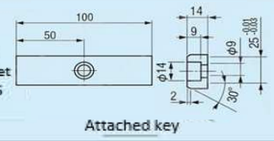
	GK	Spring type change Coil Spring / Gas Spring
	NGK	Without gas spring
	NF	No gas spring filled with nitrogen gas Applicable to only spring type GK