MGFNS200 (θ =00-45)
MEFNS200 (θ =00-45)
(Economy type)

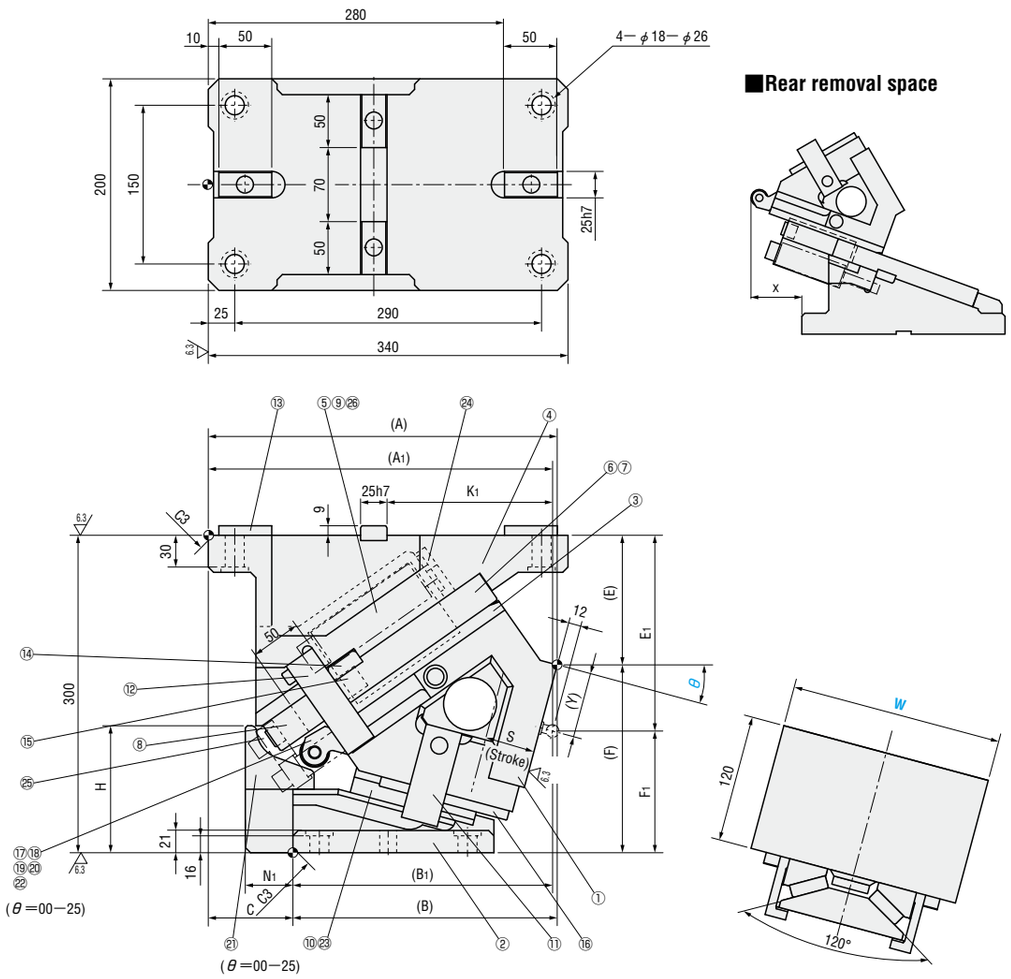

■Rear removal space

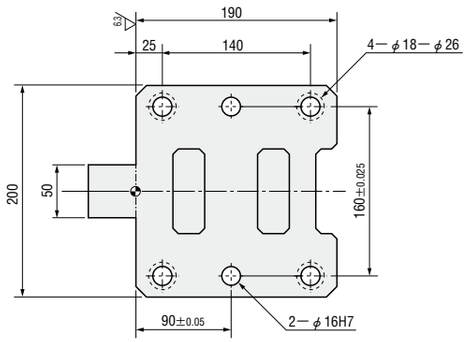

■Components table P.1311

W	θ	A	A1	B	B1	C	E	E1	F	F1	H	K1	N1	Y	x
200	00	335.84	347.84	207.84	219.84	128	96.98	170	203.02	130	80	180.5	55	73.02	21
	05	335.25	340.82	222.25	227.82	113	100.91	175	199.09	125	98	173		73.32	37
	10	337.27	337.3	236.27	236.3	101	111.09	180	188.91	120	109	165.5	50	67.86	48
	15	329.78	325.45	249.78	245.45	80	122.46	185	177.54	115	120	156.5	45	61.53	66
	20	332.68	323.61	262.68	253.61	70	129.99	190	170.01	110	137	149	42	59.49	71
	25	332.88	319.83	274.88	261.83	58	138.62	195	161.38	105	154	140	37	56.61	83
	30	334.28	315.39	286.28	267.39	48	148.28	205	151.72	95	125	132.5	30	58.57	90
	35	329.8	305.16	296.8	272.16	33	158.89	215	141.11	85	135	125	25	60.1	100
	40	321.35	291.18	306.35	276.18	15	170.38	225	129.62	75	155	117.5		61.23	111
	45	314.86	279.49	314.86	279.49	0	182.66	235	117.34	65		111.5		62.03	116

Slide Stroke S	Working force KN (tonf)	Total weight kg	Catalog No.	W	θ	Spring Code
32.1	353.0 (36.0)	90.3	MGFNS MEFNS (Economy type)	200	00	GK ISO NGK NISO
35.5		88.0			05	
38.9		87.5			10	
42.4		87.0			15	
46.1		85.8			20	
50.0		86.2			25	
54.3		85.6			30	
59.0		86.2			35	
64.3		86.6			40	
70.4		88.0			45	

■Spring type

Spring Code	Spring specification	Spring load N (kgf)				Remarks
		θ	Preload	5mm before bottom dead center	Max. load	
GK	K500—63.5	—	—	—	6125(625)	Gas spring (Equivalent to KALLER)
ISO	φ50×178	00	749(76.4)	3910(398.7)	4494(458.3)	Coil spring (Constant=74.9N/mm)
		05		3970(404.8)		
		10		4015(409.4)		
		15		4052(413.2)		
		20		4090(417.0)		
		25		4120(420.1)		
		30		4149(423.1)		
		35		4179(426.2)		
		40		4202(428.5)		
		45		4232(431.5)		
NGK	—	—	—	—	—	Without gas spring
NISO	—	—	—	—	—	Without coil spring

Order

Catalog No.	W	—	θ	—	Spring Code
MGFNS	200	—	15	—	ISO

Days to Ship Quotation

Price Quotation

Alterations

Catalog No.	W	—	θ	—	Spring Code	— (N・NF)
MGFNS	200	—	05	—	NGK	— N

Alterations	Code	Spec.
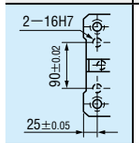	N	Add dowel hole Add 2 dowel holes (φ16H7) on cam holder.
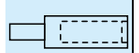	NF	No nitrogen is filled into gas spring. Only for GK.