# SPRUNG CORE / SPRUNG CORE WEAR BLOCK

• Usable temperature up to 150°C

**SPRGC**

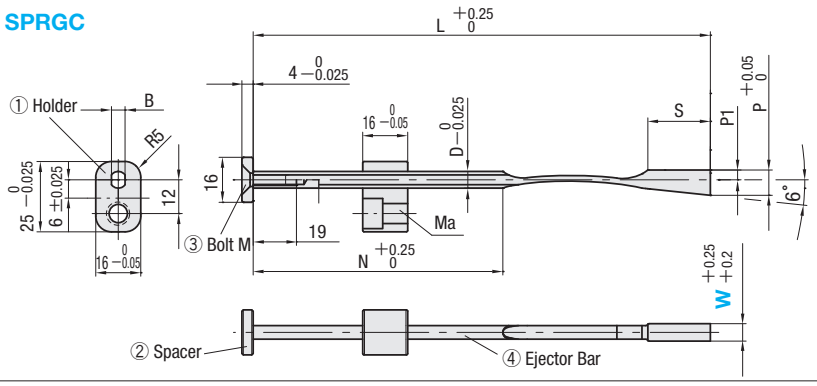


| No. | Product name | Material | Hardness (HRC) |
|---|---|---|---|
| ① | Holder | C3604 equivalent | Base Material |
| ② | Spacer | S45C | |
| ③ | Bolt | SCM435 | |
| ④ | Ejector Bar | 1.8159 equivalent | 42±3 |

| ①Holder | | ③Bolt | ④Ejector Bar | | | | | | | Part No. | |
|---|---|---|---|---|---|---|---|---|---|---|---|
| Bolt hole Ma | B | M | D | L | N | S | h (max.) | P1 | P | Type | W |
| For M5 | 4.84 | M4 | 5.94 | 162.5 | 88 | 22 | 12.5 | 3.5 | 9 | SPRGC | 6 |
| For M6 | 5.08 | | 6.35 | | | | | | | | 8 |
| | 7.37 | M5 | 7.92 | 200 | 111 | 26 | 16.5 | 4.5 | 11.5 | | 10 |
| | | | | | | | | | | | 12 |
| | | | | | 107 | 30 | 20 | | 12.5 | | 14 |
| | | | | | | | | | | | 16 |

**SPRGC—WB**

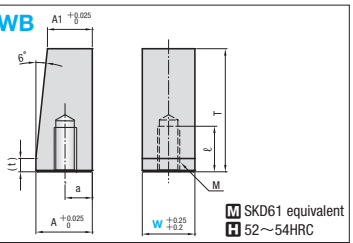


| M | ℓ | a | t (Reference value) | T | A1 | A | Part No. Type | W |
|---|---|---|---|---|---|---|---|---|
| M5 | 10 | 7.05 | (3) | 25.4 | 13.55 | 15.9 | SPRGC—WB | 6 |
| M6 | | | | | | | | 8 |
| | | | | | 12.05 | 14.4 | | 10 |
| | 12 | | | | | | | 12 |
| | | 8.12 | | 33.3 | 12.12 | 15.24 | | 14 |
| | | | | | | | | 16 |

Order — Part No. SPRGC8, SPRGC—WB6

Days to Ship — 15 Days

Price

**Order / Quote:**
WOS: https://in.misumi-ec.com/
TEL:+91-124-468-8800 E-mail:cs@misumi.co.in

## ■Feature

- Sprung Core makes undercut injection molding possible by only adjusting ejector pin size.
- The tip can be processed to any shape for use.
- When using block (SPRGC—WB), the block will prevent slides from wearing down.

## Notes

① When the area per unit decreases, it will cause damage and deformation. Keep the processing length under h range.
② Insufficient strengh also causes damage and deformation. The groove depth should be set up to P × 0.5.
③ Provide a clearance of 0.05 mm to prevent abrasion from molded product.
④ Malfunctions may cause scratches on mold parts, and damage and deform sprung core. Set the maximum stroke amount to S.

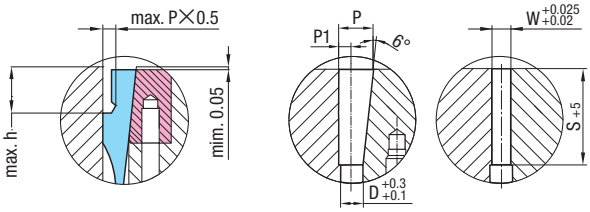


## ■Handling Precautions

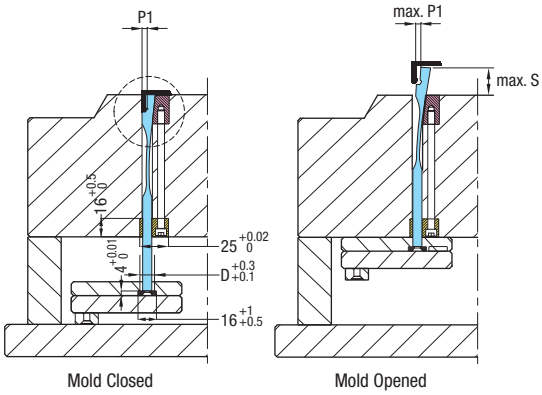


Sliding Components