Precision Ball Screws Standard Nut - Shaft Dia. 12, Lead 2, 4, 5, 10

Accuracy Grade C3, C5, C7

Points of comparison between similar products | **Consider using this product if the usage environment is a high-load, and high-frequency drive application.**

Nut Type	Type	Accuracy Grade	Shaft Dia.	Lead	Screw Shaft		Nut	
					M Material	H Hardness	M Material	H Hardness
Standard Nut	BSX	C3	12	2, 5	*AISI4150	*Induction Hardened 58~62HRC	SCM420	Carburized 58~62HRC
	BSS	C5		2, 4, 5, 10				
	BSSE	C7		2, 5, 10				

*For 1202, screw shaft material SCM415 is carburized.

BSX1202

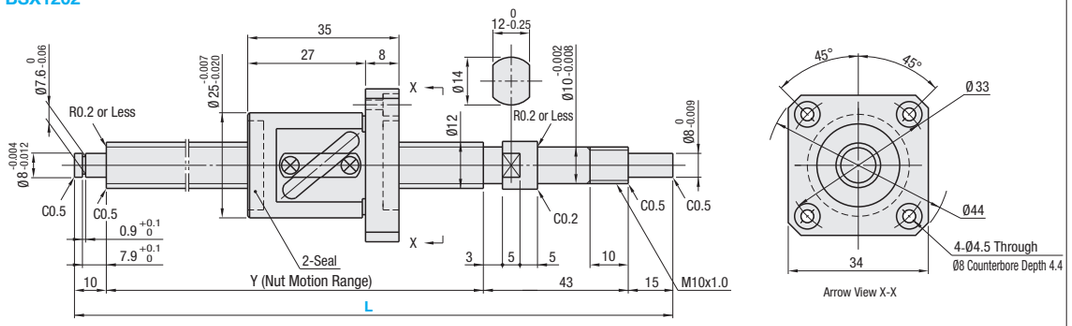

BSS, BSSE1202

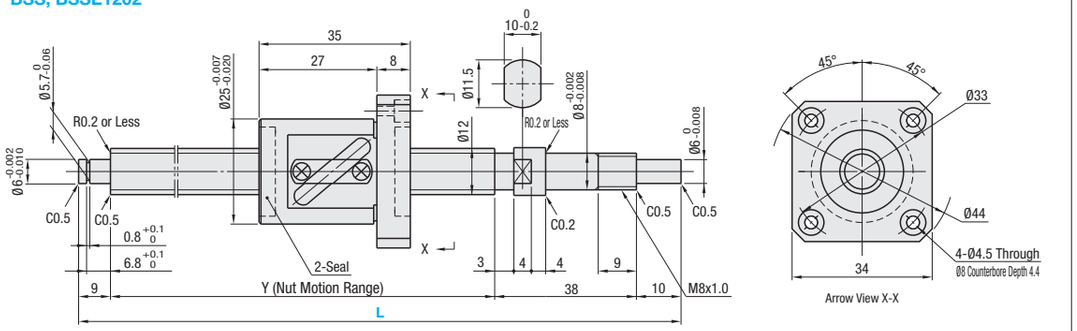

BSS1204

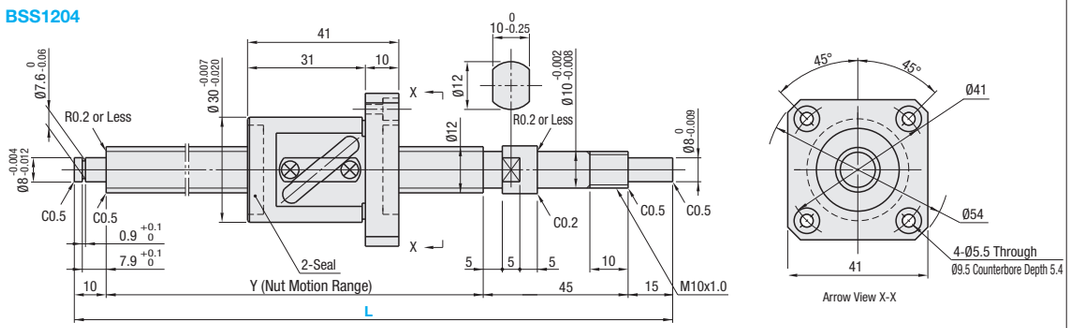

BSX, BSS, BSSE1205 BSS, BSE1210

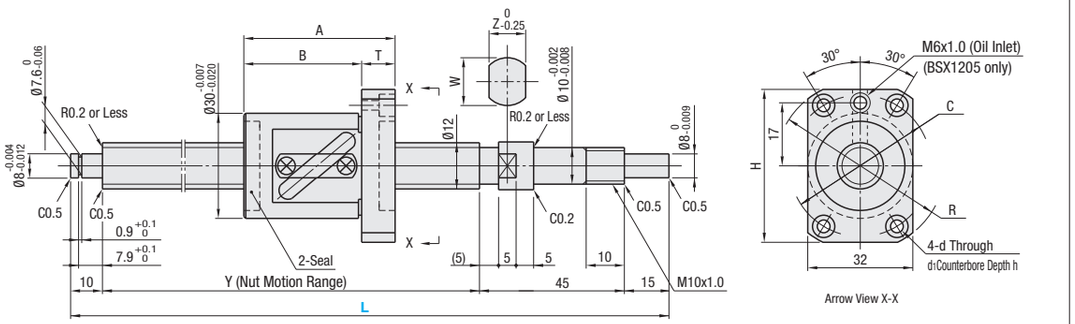

Nut Type	Accuracy Grade	Part Number Type	Screw Shaft O.D.	Lead	1mm Increment L	Y	A	B	T	Z	W	H	R	C	d	d1	h	Ball Dia.	Ball Center Dia.	Screw Root Dia.	Number of Circuits	Basic Load Rating C (Dynamic) kN	Basic Load Rating Co (Static) kN	Axial Play	Preload Torque N, cm	Twisting Direction
Standard Nut	C3	BSX	12	02	150~390	L-68	-											1.5875	12.3	(10.6)	2.5 turns 1 row	1.54	2.05	0 (Preloaded)	0.4~3.2	Right
	C5	BSS			150~445	L-57																2.45	4.1	0.005 or Less	1.0 or Less	
	C7	BSSE																						0.030 or Less	-	
	C5	BSS		04	150~400	L-70												2.3812	12.6	(10.1)		3.6	6.75	0.005 or Less	1.0 or Less	
	C3	BSX		05	150~440	L-70	44	34	10	12	14	45	50	40	4.5	8	4.4	3.175	12.8	(9.5)		3.74	4.9	0 (Preloaded)	1.5~5.0	Right
	C5	BSS			150~450					10	12											5.95	9.8	0.005 or Less	1.0 or Less	
	C7	BSSE																						0.030 or Less	-	
	C5	BSS		10	200~600	L-70	49	37	12			48	54	41	5.5	9.5	5.4				1.5 turns 1 row	3.85	5.9	0.005 or Less	2.0 or Less	Right
	C7	BSSE																						0.030 or Less	-	

kgf=Nx0.101972

Ordering Example

Part Number	-	L
BSX1202	-	300
BSSE1210L	-	420 (L Type Greased)
BSSE1210G	-	420 (G Type Greased)

Accuracy Grade	Part Number	Unit Price 1 ~ 4 pc(s). L150 ~ 199	L200	L201 ~ 250	L251 ~ 290	L291 ~ 295	L296 ~ 300	L301 ~ 390	L391 ~ 400	L401 ~ 440	L441 ~ 445	L446 ~ 450	L451 ~ 600
C3	BSX1202										-		
C5	BSS1202											-	
C7	BSSE1202											-	
C5	BSS1204									-			
C3	BSX1205										-		
C5	BSS1205												-
C7	BSSE1205												-
C5	BSS1210	-											
C7	BSSE1210	-											

Alterations Part Number - L - (FC, KC ··· etc.)
BSX1202 - 300 - SWC13

Alterations	Code	Spec.
No Machining on Support Side Shaft End 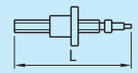	NC	No machining added on the support side shaft end. Ordering Code NC
Ball Nut Orientation Reversed 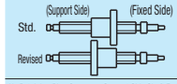	RLC	Changes the nut direction. Ordering Code RLC
No Retaining Ring Groove on Support Side Shaft End	RNC	No Retaining Ring Groove on Support Side Shaft End. Ordering Code RNC. Combination with FC is not available.
Change Support Side Shaft End Machining	GC	Changes the machining on the support side. Q is selectable from 6 or 8. Y dimension is shortened. G=1mm Increment. Ordering Code GC-Q8-G20. 5≤G≤Qx3. Not applicable to 1202 of C5 and C7.
Change Support Side Shaft End Length 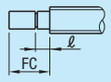	FC	Changes the length of the support side shaft end. FC=1mm Increment. Ordering Code FC20. Y dimension is shortened.

Size	ℓ	FC Range
1202	6.8	10≤FC≤20
1204	7.9	11≤FC≤20
1205		
1210		

Alterations	Code	Spec.
Keyway on Fixed Side Shaft End. Detailed Keyway Dimensions P.684	KC	Adds a keyway on the fixed side shaft end. KC=1mm Increment. Ordering Code KC10. 3≤KC≤14(9)
Keyway on Fixed Side Shaft End	KLC	Adds a keyway at a customer specified area on the fixed side shaft end. (Keyway dim. is same as KC.) K, S=1mm Increment. Ordering Code KLC-K5-S1. 4≤K+S≤14(9)
Flat Machined on Fixed Side Shaft End 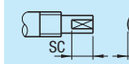	SC	Adds a flat on the fixed side shaft end. SC=1mm Increment. Ordering Code SC7. 5≤SC≤14(9)
2 Flats Machined on Fixed Side Shaft End 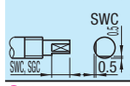	SWC SGC	Adds two flats on the fixed side shaft end. SWC: 90° Position SGC: 120° Position. 1mm Increment. Ordering Code SWC10. 5≤SWC, SGC≤14(9)

Dimensions in ( ) are for 1202.

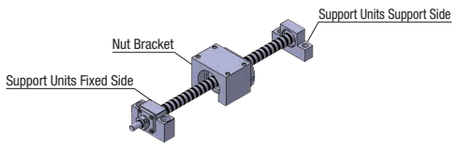

Peripherals: Combination of the following parts is available.

Support Units - Square

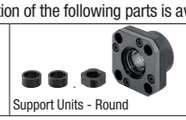
Support Units - Round

Nut Brackets - Block Type

Combination with Support Units

Ball Screw Part Number Type	Screw Shaft O.D.	Lead	Recommended Support Unit Part Number Type	No.	Shape	Fixed Side	Support Side	Page
BSX	12	02	BRW	10	Round	○		P.767
			BUR	10			○	P.768
			BSW	10	Square	○		P.761
			BUN	10			○	P.762
		05	BRW	10	Round	○		P.767
			BUR	10			○	P.768
			BSW	10	Square	○		P.761
			BUN	10			○	P.762
BSS BSSE		02	BRW	8	Round	○		P.767
			BUR	6			○	P.768
			BSW	8	Square	○		P.761
			BUN	8			○	P.762
		04 05 10	BRW	10S	Round	○		P.767
			BUR	10			○	P.768
			BSW	10S	Square	○		P.761
			BUN	10			○	P.762

Other than the part numbers shown above, Support Units with various configurations and surface treatments are also available. (P.761~P.778)

Combination with Nut Brackets

Ball Screw Part Number Type	Screw Shaft O.D.	Lead	Recommended Nut Bracket Part Number Type	No.	Page
BSX BSS BSSE	12	02	BNFB	1202S	P.780
		04	BNFM	1204S	P.780
		05	BNFR	1205S	P.780
		10	BNFA	1210S	P.780

A variety of materials and surface treatments for Nut Brackets are available. (P.780)

Notes

- Filled with lithium soap based grease (Alvania Grease S2 made by Showa Shell Sekiyu K.K).
- Cautions: Do not let the nuts overrun or remove the nuts from the screw shafts. It may cause the balls to fall out or damage the ball recirculation parts.
- Various grease options are available. For Days to Ship, Price and specifications, P.686 ⊗BSX is not applicable.
- For accuracy of Ball Screws, see P.2223 and P.2224.
- For details of Support Units, see P.753 ~ P.778.
- Use one of the support unit accessory collars on the fastening nut side.